Prepared by: Zach Perkovich
09/30/2025

Pritchard Auto Company | 980 Highway 18 East Britt Iowa | 504238700

2026 F-550 Chassis 4x4 SD Super Cab 168" WB DRW XL (X5H)

Price Level: 630 | Quote ID: 25VL025

As Configured Vehicle

Code	Description	MSRP
Base Vehicle		
X5H	Base Vehicle Price (X5H)	$61,730.00
Packages		
660A	Order Code 660A *Includes:* *- Transmission: TorqShift 10-Speed Automatic* *Includes SelectShift, selectable drive modes: normal, tow/haul, eco, slippery roads and off-road and transmission power take-off provision.* *- Wheels: 19.5" x 6" Argent Painted Steel* *Hub covers/center ornaments not included.* *- HD Vinyl 40/20/40 Split Bench Seat* *Includes center armrest, cupholder, storage, 2-way adjustable driver/passenger headrests and driver's side manual lumbar.* *- Radio: AM/FM Stereo w/MP3 Player* *Includes 6 speakers.* *- SYNC 4 Communication & Entertainment System* *Includes enhanced voice recognition, 911 Assist, 8" center display, AppLink and 1 smart-charging USB port.* *- Ford Connectivity Package (1-Year Included)* *Includes unlimited Wi-Fi hotspot. Included for 1-year from warranty start date. Requires activation via Ford app with credit card authorization; customer may cancel at any time. Evolving technology/cellular networks/vehicle capability may limit functionality and prevent operation of connected features. Ford may temporarily slow data speeds if such data usage reaches or exceeds 50GB within a billing cycle or due to network limitations. If a customer uses more than 50% of their data usage in a roaming country during a 60-day period, Ford may remove or limit the customer's data plan.*	N/C
Powertrain		
99T	Engine: 6.7L 4V OHV Power Stroke V8 Turbo Diesel B20 *Includes Operator Commanded Regeneration (OCR), Diesel Exhaust Fluid (DEF) tank and manual push-button engine-exhaust braking.* *Includes:* *- Dual 68 AH/65 AGM Battery* *- 250 Amp Alternator*	$10,995.00
44G	Transmission: TorqShift 10-Speed Automatic *Includes SelectShift, selectable drive modes: normal, tow/haul, eco, slippery roads and off-road and transmission power take-off provision.*	Included
X4L	Limited Slip w/4.30 Axle Ratio	N/C
68H	GVWR: 19,550 lb Payload Plus Upgrade Package 2 Not available in California. Ford is restricting sales of 6.7L Diesel (99T) on F-550 with Payload Plus Upgrade Package 2 (68H) to customers for registration outside of California.	$1,155.00

Prices and content availability as shown are subject to change and should be treated as estimates only. Actual base vehicle, package and option pricing may vary from this estimate because of special local pricing, availability or pricing adjustments not reflected in the dealer's computer system. See salesperson for the most current information.

2026 F-550 Chassis 4x4 SD Super Cab 168" WB DRW XL (X5H)

Price Level: 630 | Quote ID: 25VL025

As Configured Vehicle (cont'd)

Code	Description	MSRP
	Includes upgraded frame, upgraded rear-axle and low deflection/high capacity rear springs. Increases max RGAWR to 14,706 lbs. Note: See Order Guide Supplemental Reference for further details on GVWR.	
Wheels & Tires		
TGK	Tires: 225/70Rx19.5G BSW Traction (TGK) *Includes 4 traction tires on the rear and 2 traction tires on the front. Not recommended for over the road applications; could incur irregular front tire wear and/or NVH.*	$215.00
64Z	Wheels: 19.5" x 6" Argent Painted Steel *Hub covers/center ornaments not included.*	Included
Seats & Seat Trim		
A	HD Vinyl 40/20/40 Split Bench Seat *Includes center armrest, cupholder, storage, 2-way adjustable driver/passenger headrests and driver's side manual lumbar.*	Included
Other Options		
PAINT	Monotone Paint Application	STD
168WB	168" Wheelbase	STD
STDRD	Radio: AM/FM Stereo w/MP3 Player *Includes 6 speakers.* *Includes:* *- SYNC 4 Communication & Entertainment System* *Includes enhanced voice recognition, 911 Assist, 8" center display, AppLink and 1 smart-charging USB port.* *- Ford Connectivity Package (1-Year Included)* *Includes unlimited Wi-Fi hotspot. Included for 1-year from warranty start date. Requires activation via Ford app with credit card authorization; customer may cancel at any time. Evolving technology/cellular networks/vehicle capability may limit functionality and prevent operation of connected features. Ford may temporarily slow data speeds if such data usage reaches or exceeds 50GB within a billing cycle or due to network limitations. If a customer uses more than 50% of their data usage in a roaming country during a 60-day period, Ford may remove or limit the customer's data plan.*	Included
96V	XL Chrome Package *Includes:* *- Chrome Front Bumper* *- Bright Grille* *- Privacy Glass w/Power Sliding Rear Glass* *- Rear Window Defroster* *- Remote Start* *- Halogen Fog Lamps*	$425.00
67P	Extra Heavy-Duty Front End Suspension - 7,500 GAWR	$285.00

Prices and content availability as shown are subject to change and should be treated as estimates only. Actual base vehicle, package and option pricing may vary from this estimate because of special local pricing, availability or pricing adjustments not reflected in the dealer's computer system. See salesperson for the most current information.

2026 F-550 Chassis 4x4 SD Super Cab 168" WB DRW XL (X5H)

Price Level: 630 | Quote ID: 25VL025

As Configured Vehicle (cont'd)

Code	Description	MSRP
	Includes upgraded front axle and max 7,500 lbs. Front springs/GAWR rating for configuration selected. Incomplete vehicle package - requires further manufacture and certification by a final stage manufacturer.	
535	High Capacity Trailer Tow Package	$580.00
	Includes trailer brake wiring kit. Increases GCW from 32,500 lbs. to 40,000 lbs. Note: Salesperson's Portfolio or Trailer Towing Guide should be consulted for specific trailer towing or camper limits and corresponding required equipment, axle ratios and model availability. See Supplemental Reference for vehicle height consideration.	
41H	Engine Block Heater	$250.00
60X	Automated Emergency Braking (AEB) Removal	N/C
	Removes Pre-Collision Assist with Automated Emergency Barking (AEB) and forward collision warning, auto high beams, post impact braking and audible lane departure warning.	
18A	Vehicle Integration System 2.0	$400.00
	FIN code required to program the module.	
	Includes programmable vehicle integration system. Recommended for trucks that will utilize upfit aftermarket equipment.	
86M	Dual 68 AH/65 AGM Battery	Included
67E	250 Amp Alternator	Included
153	Front License Plate Bracket	N/C
	Standard in states requiring 2 license plates and optional to all others.	
52B	Trailer Brake Controller	$300.00

Fleet Options

WARANT	Fleet Customer Powertrain Limited Warranty	N/C
	Requires valid FIN code.	
	Ford is increasing the 5-year 60,000-mile limited powertrain warranty to 5-years, 100,000 miles. Only Fleet purchasers with a valid Fleet Identification Number (FIN code) will receive the extended warranty. When the sale is entered into the sales reporting system with a sales type fleet along with a valid FIN code, the warranty extension will automatically be added to the vehicle. The extension will stay with the vehicle even if it is subsequently sold to a non-fleet customer before the expiration. This extension applies to both gas and diesel powertrains. Dealers can check for the warranty extension on eligible fleet vehicles in OASIS. Please refer to the Warranty and Policy Manual section 3.13.00 Gas Engine Commercial Warranty. This change will also be reflected in the printed Warranty Guided distributed with the purchase of every new vehicle.	

Emissions

425	50-State Emissions System	STD

Exterior Color

Prices and content availability as shown are subject to change and should be treated as estimates only. Actual base vehicle, package and option pricing may vary from this estimate because of special local pricing, availability or pricing adjustments not reflected in the dealer's computer system. See salesperson for the most current information.

2026 F-550 Chassis 4x4 SD Super Cab 168" WB DRW XL (X5H)

Price Level: 630 | Quote ID: 25VL025

As Configured Vehicle (cont'd)

Code	Description	MSRP
Z1_01	Oxford White	N/C
Interior Color		
AS_03	Medium Dark Slate w/HD Vinyl 40/20/40 Split Bench Seat	N/C
SUBTOTAL		$76,335.00
Destination Charge		$2,595.00
TOTAL		$78,930.00

Prices and content availability as shown are subject to change and should be treated as estimates only. Actual base vehicle, package and option pricing may vary from this estimate because of special local pricing, availability or pricing adjustments not reflected in the dealer's computer system. See salesperson for the most current information.

2026 F-550 Chassis 4x4 SD Super Cab 168" WB DRW XL (X5H)

Price Level: 630 | Quote ID: 25VL025

Available Options

Selected	Code	Description	MSRP
Packages			
☑	660A	Order Code 660A	N/C

Includes:
- Engine: 7.3L 2V DEVCT NA PFI V8 Gas
- 190 Amp Alternator
- Transmission: TorqShift 10-Speed Automatic
Includes SelectShift, selectable drive modes: normal, tow/haul, eco, slippery roads and off-road and transmission power take-off provision.
- 4.88 Axle Ratio
- GVWR: 18,000 lbs Payload Package
- Tires: 225/70Rx19.5G BSW A/P
- Wheels: 19.5" x 6" Argent Painted Steel
Hub covers/center ornaments not included.
- HD Vinyl 40/20/40 Split Bench Seat
Includes center armrest, cupholder, storage, 2-way adjustable driver/passenger headrests and driver's side manual lumbar.
- Radio: AM/FM Stereo w/MP3 Player
Includes 6 speakers.
- SYNC 4 Communication & Entertainment System
Includes enhanced voice recognition, 911 Assist, 8" center display, AppLink and 1 smart-charging USB port.
- Ford Connectivity Package (1-Year Included)
Includes unlimited Wi-Fi hotspot. Included for 1-year from warranty start date. Requires activation via Ford app with credit card authorization; customer may cancel at any time. Evolving technology/cellular networks/vehicle capability may limit functionality and prevent operation of connected features. Ford may temporarily slow data speeds if such data usage reaches or exceeds 50GB within a billing cycle or due to network limitations. If a customer uses more than 50% of their data usage in a roaming country during a 60-day period, Ford may remove or limit the customer's data plan.

Powertrain			
☐	99N	Engine: 7.3L 2V DEVCT NA PFI V8 Gas	STD

Includes:
- 190 Amp Alternator

☑	99T	Engine: 6.7L 4V OHV Power Stroke V8 Turbo Diesel B20	$10,995.00

Includes Operator Commanded Regeneration (OCR), Diesel Exhaust Fluid (DEF) tank and manual push-button engine-exhaust braking.
Includes:
- 4.10 Axle Ratio
- Dual 68 AH/65 AGM Battery
- 250 Amp Alternator

☑	44G	Transmission: TorqShift 10-Speed Automatic	STD

Includes SelectShift, selectable drive modes: normal, tow/haul, eco, slippery roads and off-road and transmission power take-off provision.

Prices and content availability as shown are subject to change and should be treated as estimates only. Actual base vehicle, package and option pricing may vary from this estimate because of special local pricing, availability or pricing adjustments not reflected in the dealer's computer system. See salesperson for the most current information.

2026 F-550 Chassis 4x4 SD Super Cab 168" WB DRW XL (X5H)

Price Level: 630 | Quote ID: 25VL025

Available Options (cont'd)

Selected	Code	Description	MSRP
☐	X48	4.88 Axle Ratio	STD
☐	X41	4.10 Axle Ratio	N/C
☐	X4N	Limited Slip w/4.10 Axle Ratio	$395.00
☑	X4L	Limited Slip w/4.30 Axle Ratio	Variable
☐	X8L	Limited Slip w/4.88 Axle Ratio	$395.00
☐	STDGV	GVWR: 18,000 lbs Payload Package	STD
☐	68D	GVWR: 17,500 lb Payload Downgrade Package	N/C
☐	68M	GVWR: 19,500 lb Payload Plus Upgrade Package 1	$1,155.00
	Ford is restricting sales of F-550 6.7L Diesel (99T) with Payload Plus Upgrade Package 1 (68M) to customers for registration in California.		
	Includes upgraded frame, upgraded rear-axle and low deflection/high capacity rear springs. Increases max RGAWR to 14,706 lbs. Note: See Order Guide Supplemental Reference for further details on GVWR.		
☑	68H	GVWR: 19,550 lb Payload Plus Upgrade Package 2	$1,155.00
	Includes upgraded frame, upgraded rear-axle and low deflection/high capacity rear springs. Increases max RGAWR to 14,706 lbs. Note: See Order Guide Supplemental Reference for further details on GVWR.		

Wheels & Tires

☐	TGJ	Tires: 225/70Rx19.5G BSW A/P	STD
☐	TGM	Tires: 225/70Rx19.5G BSW Traction	$190.00
	Includes 4 traction tires on the rear and 2 A/P tires on the front.		

Prices and content availability as shown are subject to change and should be treated as estimates only. Actual base vehicle, package and option pricing may vary from this estimate because of special local pricing, availability or pricing adjustments not reflected in the dealer's computer system. See salesperson for the most current information.

2026 F-550 Chassis 4x4 SD Super Cab 168" WB DRW XL (X5H)

Price Level: 630 | Quote ID: 25VL025

Available Options (cont'd)

Selected	Code	Description	MSRP
☑	TGK	Tires: 225/70Rx19.5G BSW Traction (TGK) *Includes 4 traction tires on the rear and 2 traction tires on the front. Not recommended for over the road applications; could incur irregular front tire wear and/or NVH.*	$215.00
☑	64Z	Wheels: 19.5" x 6" Argent Painted Steel *Hub covers/center ornaments not included.*	STD
☐	512	Spare Tire & Wheel Required in Rhode Island. *Excludes carrier.* *Includes:* *- 6-Ton Hydraulic Jack*	$350.00
☐	51D	Spare Tire & Wheel Delete (Regional) Only available to pool accounts for sales to Rhode Island.	-$85.00
☐	945	Stainless Steel Wheel Covers (Pre-Installed) *Front and rear.*	$500.00

Seats & Seat Trim

☑	A	HD Vinyl 40/20/40 Split Bench Seat *Includes center armrest, cupholder, storage, 2-way adjustable driver/passenger headrests and driver's side manual lumbar.*	STD
☐	1	Cloth 40/20/40 Split Bench Seat *Includes center armrest, cupholder, storage and driver's side manual lumbar.*	$100.00
☐	L	Vinyl 40/Mini-Console/40 Front Seat *Includes driver's side manual lumbar.*	$355.00
☐	4	Cloth 40/Mini-Console/40 Front Seat *Includes driver's side manual lumbar.*	$515.00

Other Options

Prices and content availability as shown are subject to change and should be treated as estimates only. Actual base vehicle, package and option pricing may vary from this estimate because of special local pricing, availability or pricing adjustments not reflected in the dealer's computer system. See salesperson for the most current information.

2026 F-550 Chassis 4x4 SD Super Cab 168" WB DRW XL (X5H)

Price Level: 630 | Quote ID: 25VL025

Available Options (cont'd)

Selected	Code	Description	MSRP
☑	PAINT	Monotone Paint Application	STD
☑	168WB	168" Wheelbase	STD
☑	STDRD	Radio: AM/FM Stereo w/MP3 Player	STD

Includes 6 speakers.
Includes:
- SYNC 4 Communication & Entertainment System
Includes enhanced voice recognition, 911 Assist, 8" center display, AppLink and 1 smart-charging USB port.
- Ford Connectivity Package (1-Year Included)
Includes unlimited Wi-Fi hotspot. Included for 1-year from warranty start date. Requires activation via Ford app with credit card authorization; customer may cancel at any time. Evolving technology/cellular networks/vehicle capability may limit functionality and prevent operation of connected features. Ford may temporarily slow data speeds if such data usage reaches or exceeds 50GB within a billing cycle or due to network limitations. If a customer uses more than 50% of their data usage in a roaming country during a 60-day period, Ford may remove or limit the customer's data plan.

☑	96V	XL Chrome Package	$425.00

Includes:
- Chrome Front Bumper
- Bright Grille
- Privacy Glass w/Power Sliding Rear Glass
- Rear Window Defroster
- Remote Start
- Halogen Fog Lamps

☐	94D	Ford Connectivity Pack (One-Time Purchase - 7 Yrs)	$745.00

Includes unlimited Wi-Fi hotspot. Select option for a one-time purchase of Ford connectivity package. Ford connectivity package will be active for 7 years on this vehicle (non-transferrable to another VIN) from warranty start date. Requires activation via Ford app. Evolving technology/cellular networks/vehicle capability may limit functionality and prevent operation of connected features. Ford may temporarily slow data speeds if such data usage reaches or exceeds 50GB within a billing cycle or due to network limitations. If a customer uses more than 50% of their data usage in a roaming country during a 60-day period, Ford may remove or limit the customer's data plan.

☐	67H	Heavy-Service Front Suspension Package	$125.00

Includes pre-selected heavy-service front springs (see Order Guide Supplemental Reference for springs/FGAWR of specific vehicle configurations). Recommended only on vehicles which will permanently utilize aftermarket equipment such as heavy-duty winches, brush guards or other apparatus which loads the front axle to the specified Gross Axle Weight Rating (GAWR). Note 1: May result in a deterioration of ride quality. Note 2: Vehicle ride height will increase with the addition of this package.

☐	67X	Extra Heavy-Service Suspension Package	$125.00

Prices and content availability as shown are subject to change and should be treated as estimates only. Actual base vehicle, package and option pricing may vary from this estimate because of special local pricing, availability or pricing adjustments not reflected in the dealer's computer system. See salesperson for the most current information.

2026 F-550 Chassis 4x4 SD Super Cab 168" WB DRW XL (X5H)

Price Level: 630 | Quote ID: 25VL025

Available Options (cont'd)

Selected	Code	Description	MSRP
		Includes pre-selected extra heavy-service front springs (see Order Guide Supplemental Reference for springs/FGAWR of specific vehicle configurations). Recommended only on vehicles which will permanently utilize aftermarket equipment such as heavy-duty winches, brush guards or other apparatus which loads the front axle to the specified Gross Axle Weight Rating (GAWR). Note 1: May result in a deterioration of ride quality. Note 2: Vehicle ride height will increase with the addition of this package.	
☑	67P	Extra Heavy-Duty Front End Suspension - 7,500 GAWR	$285.00
		Includes upgraded front axle and max 7,500 lbs. Front springs/GAWR rating for configuration selected. Incomplete vehicle package - requires further manufacture and certification by a final stage manufacturer.	
☐	473	Snow Plow Prep Package	$350.00
		Includes pre-selected springs (see order guide supplemental reference for springs/FGAWR of specific vehicle configurations). Note 1: Restrictions apply; see supplemental reference or body builders layout book for details. Note 2: Also allows for the attachment of a winch. Note 3: Highly recommended to add (86M) dual battery on 7.3L gas engine. Adding (67B) 410 amp dual alternators for diesel engine is highly recommended for max power output.	
☑	535	High Capacity Trailer Tow Package	$580.00
		Includes trailer brake wiring kit. Increases GCW from 32,500 lbs. to 40,000 lbs. Note: Salesperson's Portfolio or Trailer Towing Guide should be consulted for specific trailer towing or camper limits and corresponding required equipment, axle ratios and model availability. See Supplemental Reference for vehicle height consideration.	
☐	86S	Low Deflection Spacers	$110.00
		Includes 2" spacer blocks. Recommended for rear-biased loading, such as wrecker/retriever applications.	
☑	41H	Engine Block Heater	$250.00
☐	86K	Programmable Engine Idle Shutdown Timer	$250.00
		Selection of this option enables the driver to select a time period between 1 to 30 minutes before the engine will shut off after idling. There will not be an option to override this timing. Customers needing to idle their vehicles for longer periods should not select this option.	
☐	41P	Transfer Case Skid Plates	$150.00
☑	60X	Automated Emergency Braking (AEB) Removal	N/C
		Removes Pre-Collision Assist with Automated Emergency Barking (AEB) and forward collision warning, auto high beams, post impact braking and audible lane departure warning.	
☐	43K	Pro Power Onboard - 2kW	$985.00
		Includes dual alternators 12V 250 Amp + 24V 150 Amp. Placement and connection of the aux outlet is the responsibility of the final stage manufacturer.	

Prices and content availability as shown are subject to change and should be treated as estimates only. Actual base vehicle, package and option pricing may vary from this estimate because of special local pricing, availability or pricing adjustments not reflected in the dealer's computer system. See salesperson for the most current information.

2026 F-550 Chassis 4x4 SD Super Cab 168" WB DRW XL (X5H)

Price Level: 630 | Quote ID: 25VL025

Available Options (cont'd)

Selected	Code	Description	MSRP
☑	18A	Vehicle Integration System 2.0	$400.00
	FIN code required to program the module.		
	Includes programmable vehicle integration system. Recommended for trucks that will utilize upfit aftermarket equipment.		
☐	61J	6-Ton Hydraulic Jack	$55.00
☐	61J_	6-Ton Hydraulic Jack (Regional)	N/C
	Standard in Rhode Island.		
☑	86M	Dual 68 AH/65 AGM Battery	$210.00
☑	67E	250 Amp Alternator	N/C
☐	67A	350 Amp Dual Alternators	N/C
	Includes 190 Amp + 160 Amp.		
☐	67B	410 Amp Dual Alternators	$215.00
	Includes 250 Amp + 160 Amp.		
☐	65M	26.5 Gallon Mid Ship Fuel Tank	$125.00
	Removes 40 gallon fuel tank.		
☐	65C	Dual Diesel Fuel Tanks	$625.00
	Combines 40 gallon aft-of-axle and 26.5 gallon mid ship tank.		
☐	18B	Platform Running Boards	$445.00
☐	59H	Center High-Mounted Stop Lamp (CHMSL)	$100.00
☑	153	Front License Plate Bracket	N/C
	Standard in states requiring 2 license plates and optional to all others.		

Prices and content availability as shown are subject to change and should be treated as estimates only. Actual base vehicle, package and option pricing may vary from this estimate because of special local pricing, availability or pricing adjustments not reflected in the dealer's computer system. See salesperson for the most current information.

2026 F-550 Chassis 4x4 SD Super Cab 168" WB DRW XL (X5H)

Price Level: 630 | Quote ID: 25VL025

Available Options (cont'd)

Selected	Code	Description	MSRP
☐	872	Rear View Camera & Prep Kit *Pre-installed content includes cab wiring and frame wiring to the rear most cross member. Upfitters kit includes camera with mounting bracket, 20' jumper wire and camera mounting/aiming instructions.*	$515.00
☑	52B	Trailer Brake Controller	$300.00
☐	52S	Interior Work Surface	$140.00
☐	41A	Rapid-Heat Supplemental Cab Heater *Includes:* *- 410 Amp Dual Alternators* *Includes 250 Amp + 160 Amp.*	$350.00
☐	43C	Pro Power Onboard - 400W Outlet *Includes 1 in-dash mounted outlet.*	$225.00
☐	76C	Exterior Backup Alarm (Pre-Installed)	$230.00
☐	91S	Amber 360-Degree Dual Beacon LED Warning Strobes *Pre-installed.*	$660.00
☐	91G	Amber-Wht 360-Deg Dual Beacon LED Warning Strobes *Pre-installed.*	$660.00
☐	61L	Front Wheel Well Liner (Pre-Installed)	$180.00
☐	79V	COV Required	N/A
☐	C09	Priced DORA	N/C

Dealer Installed Options

☐	FI4AD	SecuriCode Wireless Keyless Entry Keypad	$230.00

Prices and content availability as shown are subject to change and should be treated as estimates only. Actual base vehicle, package and option pricing may vary from this estimate because of special local pricing, availability or pricing adjustments not reflected in the dealer's computer system. See salesperson for the most current information.

2026 F-550 Chassis 4x4 SD Super Cab 168" WB DRW XL (X5H)

Price Level: 630 | Quote ID: 25VL025

Available Options (cont'd)

Selected	Code	Description	MSRP
	Driver's side. Shipped separately from the vehicle for dealer installation.		
☐	BBVAF	Windshield Sunshade by Covercraft *Shipped separately from the vehicle for dealer installation.*	$130.00
☐	AH1AB	Super Duty Tool Kit by AllTrade *Shipped separately from the vehicle for dealer installation.*	$520.00
☐	B1HAB	Illuminated Front Emblem *Shipped separately from the vehicle for dealer installation.*	$480.00
☐	IDGAB	Kicker Subwoofer Late availability. *Shipped separately from the vehicle for dealer installation.*	$1,010.00
☐	AILDS	Smoke Side Window Deflector Kit (Set of 4) *Low profile by Lund. Shipped separately from the vehicle for dealer installation.*	$160.00
☐	AHQAB	First Aid Kit w/Ford Logo *Shipped separately from the vehicle for dealer installation.*	$60.00
☐	AHMAB	Roadside Assistance Kit w/Ford Logo *Shipped separately from the vehicle for dealer installation.*	$80.00
☐	AHMAC	Commercial USA Roadside Assistance Kit *Shipped separately from the vehicle for dealer installation.*	$240.00

Fleet Options

☐	47A	Ambulance Prep Package (LPO) Requires valid FIN code. *Includes upgraded front springs/GAWR rating, please see Supplemental Order Guide or visit fordbbas.com for complete details. Incomplete vehicle package - requires further manufacture and certification by a final stage manufacturer. Ford vehicles are suitable for producing ambulances only if equipped with the Ford Ambulance Prep Package. In addition, Ford urges ambulance manufacturers to follow the recommendations of the Ford Incomplete Vehicle Manual and the Ford Truck Body Builders Layout Book (and pertinent supplements). Using a Ford vehicle without the Ford Ambulance Prep Package to produce an ambulance voids the Ford warranty. Note: Stationary Elevated Idle Control (SEIC) has been integrated into the engine control module.*	$1,205.00

Prices and content availability as shown are subject to change and should be treated as estimates only. Actual base vehicle, package and option pricing may vary from this estimate because of special local pricing, availability or pricing adjustments not reflected in the dealer's computer system. See salesperson for the most current information.

2026 F-550 Chassis 4x4 SD Super Cab 168" WB DRW XL (X5H)

Price Level: 630 | Quote ID: 25VL025

Available Options (cont'd)

Selected	Code	Description	MSRP
		Includes: *- 410 Amp Dual Alternators* *Includes 250 Amp + 160 Amp.* *- Dual 68 AH/65 AGM Battery*	
☐	47L	Ambulance Prep Pkg w/Special Emissions (LPO)	$1,205.00
	Requires valid FIN code.	*Includes upgraded front springs/GAWR rating, please see Supplemental Order Guide or visit fordbbas.com for complete details. Incomplete vehicle package - requires further manufacture and certification by a final stage manufacturer. Ford vehicles are suitable for producing ambulances with special emissions only if equipped with the Ford Ambulance Prep Package with EPA Special Emergency Vehicle Emissions. In addition, Ford urges ambulance manufacturers to follow the recommendations of the Ford Incomplete Vehicle Manual and the Ford Truck Body Builders Layout Book (and pertinent supplements). Using a Ford vehicle without the Ford Ambulance Package with EPA Special Emergency Vehicle Emissions to produce an ambulance with special emissions voids the Ford warranty. Note 1: Stationary Elevated Idle Control (SEIC) has been integrated into the engine control module. Note 2: Engine calibration significantly reduces the possibility of depower mode when in stationary PTO operation. Note 3: Must meet the definition of an Emergency Vehicle, an Ambulance or Fire Truck per 40 CFR 86.1803.01 in the Federal Register. Note 4: California Code of Regulations allows for the sale of federally certified emergency vehicles in California.* *Includes:* *- 410 Amp Dual Alternators* *Includes 250 Amp + 160 Amp.* *- Dual 68 AH/65 AGM Battery*		
☐	47J	Fire/Rescue Prep Pkg w/EPA Special Emissions (LPO)	$1,205.00
	Requires valid FIN code.	*Includes upgraded front springs/GAWR rating, please see Supplemental Order Guide or visit fordbbas.com for complete details. Incomplete vehicle package - requires further manufacture and certification by a final stage manufacturer. Ford urges Fire/Rescue vehicle manufacturers to follow the recommendations of the Ford Incomplete Vehicle Manual and the Ford Truck Body Builders Layout Book (and pertinent supplements). Note 1: Stationary Elevated Idle Control (SEIC) has been integrated into the engine control module. Note 2: Engine calibration significantly reduces the possibility of depower mode when in stationary PTO operation. Note 3: Must meet the definition of an emergency vehicle, an Ambulance or Fire Truck per 40 CFR 86.1803.01 in the federal register. Note 4: California Code of Regulations allows for the sale of federally certified emergency vehicles in California.* *Includes:* *- 410 Amp Dual Alternators* *Includes 250 Amp + 160 Amp.*		
☐	927	Speed Limitation - 75-MPH Governed Top Speed (LPO)	$80.00
	Requires valid FIN code.		
☐	D9E	Built: Kentucky Truck Plant	N/C
☐	D9D	Built: Ohio Plant	N/C

Prices and content availability as shown are subject to change and should be treated as estimates only. Actual base vehicle, package and option pricing may vary from this estimate because of special local pricing, availability or pricing adjustments not reflected in the dealer's computer system. See salesperson for the most current information.

2026 F-550 Chassis 4x4 SD Super Cab 168" WB DRW XL (X5H)

Price Level: 630 | Quote ID: 25VL025

Available Options (cont'd)

Selected	Code	Description	MSRP
☐	31K	Ship-Thru: Adrian Steel	$0.00
☐	315	Ship-Thru: Alt Fuel Innovations, LLC (AFI)	$0.00
☐	31A	Ship-Thru: Altec	$0.00
☐	31T	Ship-Thru: Bobs Services LLC	$0.00
☐	311	Ship-Thru: Dejana	$0.00
☐	31U	Ship-Thru: General Truck Body	Variable
☐	31L	Ship-Thru: Holman	$0.00
☐	319	Ship-Thru: KC Truck Systems Inc.	$0.00
☐	31W	Ship-Thru: Knapheide - IN	N/C
☐	31V	Ship-Thru: Knapheide Truck Equipment	$0.00
☐	31M	Ship-Thru: Manning Truck Equipment	$0.00
☐	31N	Ship-Thru: Monroe Truck Equipment	Variable
☐	31G	Ship-Thru: NBC Truck Equipment	Variable
☐	314	Ship-Thru: Reading Equipment & Distribution	$0.00
☐	31B	Ship-Thru: Reading Equipment	$0.00

Prices and content availability as shown are subject to change and should be treated as estimates only. Actual base vehicle, package and option pricing may vary from this estimate because of special local pricing, availability or pricing adjustments not reflected in the dealer's computer system. See salesperson for the most current information.

2026 F-550 Chassis 4x4 SD Super Cab 168" WB DRW XL (X5H)

Price Level: 630 | Quote ID: 25VL025

Available Options (cont'd)

Selected	Code	Description	MSRP
☐	31S	Ship-Thru: Reading Equipment	$0.00
☐	31P	Ship-Thru: Roush CleanTech	Variable
☐	31C	Ship-Thru: Zoresco Equipment	$0.00
☐	31Z	Ship-Thru: Knapheide	$0.00
☐	31H	Ship-Thru: Manning Truck Equipment	$0.00
☐	312	Ship-Thru: National Fleet Services	Variable
☐	31Y	Ship Thru: Zoresco Equipment	$0.00
☐	FLADCR	Fleet Advertising Credit	$0.00
☑	WARANT	Fleet Customer Powertrain Limited Warranty	N/C

Requires valid FIN code.

Ford is increasing the 5-year 60,000-mile limited powertrain warranty to 5-years, 100,000 miles. Only Fleet purchasers with a valid Fleet Identification Number (FIN code) will receive the extended warranty. When the sale is entered into the sales reporting system with a sales type fleet along with a valid FIN code, the warranty extension will automatically be added to the vehicle. The extension will stay with the vehicle even if it is subsequently sold to a non-fleet customer before the expiration. This extension applies to both gas and diesel powertrains. Dealers can check for the warranty extension on eligible fleet vehicles in OASIS. Please refer to the Warranty and Policy Manual section 3.13.00 Gas Engine Commercial Warranty. This change will also be reflected in the printed Warranty Guided distributed with the purchase of every new vehicle.

☐	FINAL1	Fleet Final Order Date: TBD	N/C
☐	56M	Ford US National Fleet Incentives Ford US National - 8/13/2025	$0.00

VSO Options

☐	T07	Wheels: 19.5" Forged Polished Aluminum	$2,130.00

Prices and content availability as shown are subject to change and should be treated as estimates only. Actual base vehicle, package and option pricing may vary from this estimate because of special local pricing, availability or pricing adjustments not reflected in the dealer's computer system. See salesperson for the most current information.

2026 F-550 Chassis 4x4 SD Super Cab 168" WB DRW XL (X5H)

Price Level: 630 | Quote ID: 25VL025

Available Options (cont'd)

Selected	Code	Description	MSRP
	Minimum order quantity: 1.		
☐	T08	4 Key Lockset KTP V1	$180.00
	Minimum order quantity: 1. Only 2 keys will be programmed by the assembly plant. Dealers and modifiers must reprogram all 4 keys for PATS and RKE on each unit.		

Emissions

☑	425	50-State Emissions System	STD

General Info

☐	ORDER1	Initial Order Date: 05/22/2025	N/C
☐	START1	Start-Up Date: 07/21/2025	N/C
☐	BUILD1	Build-Out Date: TBD	N/C

Prices and content availability as shown are subject to change and should be treated as estimates only. Actual base vehicle, package and option pricing may vary from this estimate because of special local pricing, availability or pricing adjustments not reflected in the dealer's computer system. See salesperson for the most current information.

2026 F-550 Chassis 4x4 SD Super Cab 168" WB DRW XL (X5H)

Price Level: 630 | Quote ID: 25VL025

Selected Equip & Specs

Dimensions

- Conventional Capacity: 18,500 lbs.
- * **GCWR: 43,000 lbs.**
- * **Fifth-wheel towing capacity: 33,500 lbs.**
- * **Gooseneck towing capacity: 33,600 lbs.**
- Front brake diameter: 15.4"
- Rear brake diameter: 15.8"
- Vehicle body length: 253.3"
- Vehicle body width: 80.0"
- Vehicle body height: 82.5"
- Wheelbase: 168.0"
- Vehicle turning radius: 24.0'
- Front track: 74.8"
- Rear track: 74.0"
- Cab to axle: 60.0"
- Rear tire outside width: 93.9"
- Axle to end of frame: 47.2"
- Frame section modulus: 12.7 cu.in.
- Frame yield strength (psi): 50000.0
- Frame rail width: 34.2"
- Front bumper to front axle: 38.3"
- Front bumper to back of cab: 146.3"
- Interior rear cargo volume with seats folded: 31.6 cu.ft.
- Max interior rear cargo volume: 31.6 cu.ft.
- Total passenger volume: 116.0 cu.ft.
- Headroom first-row: 40.8"
- Headroom second-row: 40.3"
- Leg room first-row: 43.9"
- Leg room second-row: 33.5"
- Shoulder room first-row: 66.7"
- Shoulder room second-row: 65.8"
- Hip room first-row: 62.5"
- Hip room second-row: 64.7"

Powertrain

- * **Compression ignition system**
- * **Powerstroke 6.7L V-8 diesel direct injection, DEVCT intercooled turbo, diesel, engine with 330HP**
- Engine cylinders: V-8
- * **Horsepower: 330 HP@2200 RPM**
- * **Torque: 950 lb.-ft.@1800 RPM**
- * **Engine block heater**
- Radiator
- * **Engine retarder system**
- Auxiliary power take-off
- 10-speed automatic
- Part-time 4WD
- Four-wheel drive
- * **Recommended fuel: diesel**
- Driveline managed traction control
- Electronic transfer case shift
- * **Mechanical limited slip differential**
- Auto locking hub control

Fuel Economy and Emissions

- * **Diesel secondary fuel type**
- Federal emissions

Suspension and Handling

- Firm ride suspension
- Heavy-duty front shock absorbers
- Heavy-duty rear shock absorbers

Driveability

Prices and content availability as shown are subject to change and should be treated as estimates only. Actual base vehicle, package and option pricing may vary from this estimate because of special local pricing, availability or pricing adjustments not reflected in the dealer's computer system. See salesperson for the most current information.

2026 F-550 Chassis 4x4 SD Super Cab 168" WB DRW XL (X5H)

Price Level: 630 | Quote ID: 25VL025

Selected Equip & Specs (cont'd)

- 4-wheel disc brakes
- 4-wheel antilock (ABS) brakes
- Brake assist system
- Mono-beam rigid axle front suspension
- Front coil springs
- Rear anti-roll bar
- Hydraulic power-assist steering system
- 2-wheel steering system
- Front and rear ventilated disc brakes
- Four channel ABS brakes
- Hill Start Assist
- Front anti-roll bar
- * **Rigid axle rear suspension**
- Leaf spring rear suspension
- Re-circulating ball steering

Body Exterior

- Trailer wiring harness
- Monotone paint
- Black side window trim
- Black windshield trim
- 2 front tow hooks
- * **Black grille with chrome accents**
- Manual extendable trailer mirrors
- Black door mirrors
- Reverse opening right rear passenger door
- 19.5 x 6-inch front and dual rear argent steel wheels
- 4 doors
- Black fender flares
- Black door handles
- * **Chrome front bumper**
- * **Body-coloured front bumper rub strip**
- Convex spotter in driver and passenger side door mirrors
- Turn signal indicator in door mirrors
- Reverse opening left rear passenger door
- * **LT225/70RS19.5 AT BSW front and rear tires**

Convenience

- Power door locks with 2 stage unlocking
- All-in-one remote fob and ignition key
- Cruise control with steering wheel mounted controls
- Day/Night rearview mirror
- * **Rear window defroster**
- Front beverage holders
- 8 beverage holders
- Illuminated glove box
- Dashboard storage
- Trip computer
- Over the air updates
- Keyfob activated door locks
- Auto-locking doors
- * **Keyfob remote vehicle start**
- Power first-row windows
- * **Power rear windshield**
- Illuminated locking glove box
- Rear beverage holders
- Instrument panel covered bin
- Retained accessory power
- Upfitter switches
- PRND in IP

Comfort

- Manual climate control
- Rear under seat climate control ducts
- Full headliner coverage
- Full floor coverage
- Cabin air filter
- Cloth headliner material
- Full vinyl floor covering
- Vinyl rear seat upholstery

Prices and content availability as shown are subject to change and should be treated as estimates only. Actual base vehicle, package and option pricing may vary from this estimate because of special local pricing, availability or pricing adjustments not reflected in the dealer's computer system. See salesperson for the most current information.

2026 F-550 Chassis 4x4 SD Super Cab 168" WB DRW XL (X5H)

Price Level: 630 | Quote ID: 25VL025

Selected Equip & Specs (cont'd)

- Carpet rear seatback upholstery
- Manual tilting steering wheel
- Urethane steering wheel
- Manual telescopic steering wheel

Seats and Trim

- Seating capacity: 6
- Driver seat with 4-way directional controls
- Height adjustable front seat head restraints
- Split-bench front seat
- Front seat armrest storage
- Manual driver seat fore/aft control
- Manual passenger seat fore/aft control
- Height adjustable rear seat head restraints
- Manual driver seat lumbar
- 40-20-40 split-bench front seat
- Front passenger seat with 4-way directional controls
- Manual front seat head restraint control
- Front seat center armrest
- Manual reclining driver seat
- Manual reclining passenger seat
- Fixed rear seats
- Split-bench rear seat
- Vinyl front seat upholstery

Entertainment Features

- 2 total number of 1st row displays
- Primary touchscreen display
- AM/FM
- AM radio
- Seek scan
- Standard grade speakers
- Steering wheel mounted audio controls
- Speed sensitive volume
- Fixed audio antenna
- 8 inch primary display
- AM/FM stereo radio
- In-vehicle audio
- FM radio
- SYNC 4 external memory control
- Speakers number: 6
- SYNC 4 voice activated audio controls
- Wireless audio streaming

Lighting, Visibility and Instrumentation

- Digital/analog instrumentation display
- Trip odometer
- Compass
- Driver information center
- Engine/electric motor temperature gauge
- Transmission fluid temperature gauge
- * **Diesel exhaust fluid (def) gauge**
- Light tinted windows
- Halogen headlights
- Multiple enclosed headlights
- DRL preference setting
- Illuminated entry
- Variable instrument panel light
- Cab clearance lights
- * **Front fog lights**
- Configurable instrumentation gauges
- Digital clock
- Exterior temperature display
- Tachometer
- * **Turbo/supercharger boost gauge**
- Engine hour meter
- Gauge cluster display size (inches): 4.20
- Reflector headlights
- Autolamp auto on/off headlight control
- Delay-off headlights
- Variable intermittent front windshield wipers
- Front reading lights
- Daytime running lights
- Remote activated perimeter approach lighting
- Fade interior courtesy lights

Prices and content availability as shown are subject to change and should be treated as estimates only. Actual base vehicle, package and option pricing may vary from this estimate because of special local pricing, availability or pricing adjustments not reflected in the dealer's computer system. See salesperson for the most current information.

2026 F-550 Chassis 4x4 SD Super Cab 168" WB DRW XL (X5H)

Price Level: 630 | Quote ID: 25VL025

Selected Equip & Specs (cont'd)

Technology and Telematics

- SYNC 4 911 Assist emergency SOS system via mobile device
- Smart device wireless mirroring
- 5G Modem - Ford Connectivity Package mobile hotspot internet access
- SYNC 4 handsfree wireless device connectivity
- Ford App mobile app access
- 2 USB ports

Safety and Security

- Driver front impact airbag
- Safety Canopy System curtain first and second-row overhead airbags
- Seat mounted side impact front passenger airbag
- Front height adjustable seatbelts
- Ford Security Package (1-year included with activation) security system
- Seat mounted side impact driver airbag
- Cancellable front passenger air bag
- 6 airbags
- SecuriLock immobilizer
- Remote panic alarm

Dimensions

General Weights

* **Curb weight**	**8,000 lbs.**
* **GVWR**	**19,550 lbs.**
* **Rear curb weight**	**3,629 lbs.**
* **Payload**	**11,340 lbs.**

Trailering Weights

* **Fifth-wheel towing capacity**	**33,500 lbs.**
Conventional capacity	18,500 lbs.
* **Gooseneck towing capacity**	**33,600 lbs.**
* **GCWR**	**43,000 lbs.**

Front Weights

* **Front curb weight**	**4,371 lbs.**
* **Axle capacity front**	**7,500 lbs.**
Tire/wheel capacity front	7,500 lbs.
* **GAWR front**	**7,500 lbs.**
* **Spring rating front**	**7,500 lbs.**

Rear Weights

* **GAWR rear**	**14,706 lbs.**
* **Spring rating rear**	**14,706 lbs.**
* **Axle capacity rear**	**14,706 lbs.**
Tire/wheel capacity rear	15,000 lbs.

Off Road

Min ground clearance	8.6"

Exterior Measurements

Vehicle body length	253.3"
Vehicle body height	82.5"
Front brake diameter	15.4"
Vehicle body width	80.0"
Wheelbase	168.0"
Rear brake diameter	15.8"

Prices and content availability as shown are subject to change and should be treated as estimates only. Actual base vehicle, package and option pricing may vary from this estimate because of special local pricing, availability or pricing adjustments not reflected in the dealer's computer system. See salesperson for the most current information.

2026 F-550 Chassis 4x4 SD Super Cab 168" WB DRW XL (X5H)

Price Level: 630 | Quote ID: 25VL025

Selected Equip & Specs (cont'd)

Rear frame height loaded	29.6"	Rear frame height unloaded	35.0"
Front track	74.8"	Rear track	74.0"
Vehicle turning radius	24.0'	Cab to axle	60.0"
Rear tire outside width	93.9"	Axle to end of frame	47.2"
Frame section modulus	12.7 cu.in.	Frame yield strength (psi)	50000.0
Frame rail width	34.2"	Front bumper to front axle	38.3"
Front bumper to back of cab	146.3"		

Interior Measurements

Max interior rear cargo volume	31.6 cu.ft.	Interior rear cargo volume with seats folded	31.6 cu.ft.

Interior Volume

Total passenger volume	116.0 cu.ft.

Headroom

Headroom first-row	40.8"	Headroom second-row	40.3"

Legroom

Leg room first-row	43.9"	Leg room second-row	33.5"

Shoulder Room

Shoulder room first-row	66.7"	Shoulder room second-row	65.8"

Hip Room

Hip room first-row	62.5"	Hip room second-row	64.7"

Powertrain

Engine

* **Engine**	**Powerstroke 6.7L V-8 diesel direct injection, DEVCT intercooled turbo, diesel, engine with 330HP**	* **Valves per cylinder**	**4**
Engine cylinders	V-8	Engine location	Front mounted engine
* **Ignition**	**Compression ignition system**	Engine mounting direction	Longitudinal mounted engine
Engine block material	Iron engine block	Cylinder head material	Aluminum cylinder head

Engine Specs

* **Displacement**	**6.7L**	* **cc**	**405.9 cu.in.**
* **Bore**	**3.9"**	* **Stroke**	**4.25"**
* **Compression ratio**	**15.2**	SAEJ1349	AUG2004 compliant

Engine Power

* **Horsepower**	**330 HP@2200 RPM**	* **Torque**	**950 lb.-ft.@1800 RPM**

Alternator

Prices and content availability as shown are subject to change and should be treated as estimates only. Actual base vehicle, package and option pricing may vary from this estimate because of special local pricing, availability or pricing adjustments not reflected in the dealer's computer system. See salesperson for the most current information.

2026 F-550 Chassis 4x4 SD Super Cab 168" WB DRW XL (X5H)

Price Level: 630 | Quote ID: 25VL025

Selected Equip & Specs (cont'd)

* **Alternator amps**	**250A**
* **Alternator type**	**Heavy-duty alternator**

Battery

Battery amps	68Ah
* **Battery type**	**Dual lead acid battery**
Battery rating	750CCA
Battery run down protection	Battery run down protection

Engine Extras

* **Block heater**	**Engine block heater**
Radiator	Radiator
Auxiliary power take-off	Auxiliary power take-off
* **Engine retarder**	**Engine retarder system**

Transmission

Transmission	10-speed automatic
Transmission electronic control	Transmission electronic control
Overdrive transmission	Overdrive transmission
Lock-up transmission	Lock-up transmission
First gear ratio	4.615
Second gear ratio	2.919
Third gear ratio	2.132
Fourth gear ratio	1.773
Fifth gear ratio	1.519
Sixth gear ratio	1.277
Reverse gear ratio	4.695
Seventh gear ratio	1
Eighth gear ratio	0.851
Ninth gear ratio	0.687
Tenth gear ratio	0.632
Stall ratio	1.97
Selectable mode transmission	Selectable mode transmission
Sequential shift control	SelectShift Sequential shift control
Transmission oil cooler	Transmission oil cooler
PTO transmission provision	PTO transmission provision

Drive Type

4WD type	Part-time 4WD
Drive type	Four-wheel drive

Drivetrain

* **Axle ratio**	**4.3**

Exhaust

Tailpipe	Stainless steel single exhaust

Fuel

* **Fuel type**	**diesel**

Fuel Tank

* **DEF capacity**	**7.20 gal.**
Fuel tank capacity	40.00 gal.

Drive Feature

* **Limited slip differential**	**Mechanical limited slip differential**
Traction control	Driveline managed traction control
Locking hub control	Auto locking hub control
Transfer case	Electronic transfer case shift

Prices and content availability as shown are subject to change and should be treated as estimates only. Actual base vehicle, package and option pricing may vary from this estimate because of special local pricing, availability or pricing adjustments not reflected in the dealer's computer system. See salesperson for the most current information.

2026 F-550 Chassis 4x4 SD Super Cab 168" WB DRW XL (X5H)

Price Level: 630 | Quote ID: 25VL025

Selected Equip & Specs (cont'd)

Fuel Economy and Emissions

Fuel Economy

* **Secondary fuel type** ... **Diesel secondary fuel type**

Emissions

Emissions ... Federal emissions

Suspension and Handling

Suspension

Suspension ... Firm ride suspension

Front shock absorbers ... Heavy-duty front shock absorbers

Rear shock absorbers ... Heavy-duty rear shock absorbers

Driveability

Brakes

Brake type ... 4-wheel disc brakes

Ventilated brakes ... Front and rear ventilated disc brakes

ABS brakes ... Four channel ABS brakes

ABS brakes ... 4-wheel antilock (ABS) brakes

Brake Assistance

Hill start assist ... Hill Start Assist

Brake assist system ... Brake assist system

Front Suspension

Front anti-roll ... Front anti-roll bar

Suspension ride type front ... Mono-beam rigid axle front suspension

Front Spring

* **HD front springs** ... **Heavy-duty front springs**

Springs front ... Front coil springs

Rear Spring

Springs rear ... Rear leaf springs

Rear springs ... Heavy-duty rear springs

Rear Suspension

Rear anti-roll ... Rear anti-roll bar

Suspension type rear ... Leaf spring rear suspension

* **Suspension ride type rear** ... **Rigid axle rear suspension**

Steering

Steering ... Hydraulic power-assist steering system

Steering type ... Re-circulating ball steering

Steering type number of wheels ... 2-wheel steering system

Prices and content availability as shown are subject to change and should be treated as estimates only. Actual base vehicle, package and option pricing may vary from this estimate because of special local pricing, availability or pricing adjustments not reflected in the dealer's computer system. See salesperson for the most current information.

2026 F-550 Chassis 4x4 SD Super Cab 168" WB DRW XL (X5H)

Price Level: 630 | Quote ID: 25VL025

Selected Equip & Specs (cont'd)

Exterior

Front Wheels

Front wheels diameter	19.5"
Front wheels width	6"

Rear Wheels

Rear wheels diameter	19.5"
Rear wheels width	6"

Front And Rear Wheels

Appearance	argent
Material	steel

Front Tires

Aspect	70
Diameter	19.5"
Sidewalls	BSW
Speed	S
* **Tread**	**AT**
Type	LT
Width	225mm
* **Front wheel - RPM**	**645**

Rear Tires

Aspect	70
Diameter	19.5"
Sidewalls	BSW
Speed	S
* **Tread**	**AT**
Type	LT
Width	225mm
* **Rear wheel - RPM**	**645**

Body Exterior

Trailering

Towing wiring harness	Trailer wiring harness
* **Towing brake controller**	**Trailer brake controller**
Towing trailer sway	Trailer sway control

Exterior Features

Number of doors	4 doors
Front splash guards	Front splash guards
* **License plate front bracket**	**Front license plate bracket**

Body

Body panels	Aluminum body panels with side impact beams

Mirrors

Convex spotter	Convex spotter in driver and passenger side door mirrors
Turn signal in door mirrors	Turn signal indicator in door mirrors

Tires

Front tires LT load rating	G
Rear tires LT load rating	G

Prices and content availability as shown are subject to change and should be treated as estimates only. Actual base vehicle, package and option pricing may vary from this estimate because of special local pricing, availability or pricing adjustments not reflected in the dealer's computer system. See salesperson for the most current information.

2026 F-550 Chassis 4x4 SD Super Cab 168" WB DRW XL (X5H)

Price Level: 630 | Quote ID: 25VL025

Selected Equip & Specs (cont'd)

Wheels

Dual rear wheels ..... Dual rear wheels

Convenience

Door Locks

Door locks ... Power door locks with 2 stage unlocking
Keyfob door locks ..... Keyfob activated door locks
All-in-one key ... All-in-one remote fob and ignition key
Auto door locks ..... Auto-locking doors

Cruise Control

Cruise control ..... Cruise control with steering wheel mounted controls

Key Fob Controls

* **Fob remote vehicle controls ..... Keyfob remote vehicle start**

Rear View Mirror

Day/Night rearview mirror .. Day/Night rearview mirror

Exterior Mirrors

Door mirrors ..... Power door mirrors
Folding door mirrors ..... Manual folding door mirrors
Heated door mirrors .... Heated driver and passenger side door mirrors

Front Side Windows

First-row windows ..... Power first-row windows

Overhead Console

Overhead console ..... Full overhead console
Overhead console storage Overhead console storage

Passenger Visor

Visor passenger mirror ..... Passenger visor mirror

Power Outlets

12V power outlets ..... 2 12V power outlets

Rear Windshield

* **Rear window defroster ..... Rear window defroster**
* **Rear windshield ..... Power rear windshield**

Storage

Number of beverage holders ..... 8 beverage holders
Beverage holders ..... Front beverage holders
Beverage holders rear ..... Rear beverage holders
Glove box ..... Illuminated locking glove box
Illuminated glove box ..... Illuminated glove box
Instrument panel storage ... Instrument panel covered bin
Dashboard storage ..... Dashboard storage

Prices and content availability as shown are subject to change and should be treated as estimates only. Actual base vehicle, package and option pricing may vary from this estimate because of special local pricing, availability or pricing adjustments not reflected in the dealer's computer system. See salesperson for the most current information.

2026 F-550 Chassis 4x4 SD Super Cab 168" WB DRW XL (X5H)

Price Level: 630 | Quote ID: 25VL025

Selected Equip & Specs (cont'd)

Windows Feature

One-touch up window ..... Driver and passenger one-touch up windows
One-touch down window .. Driver and passenger one-touch down windows

Windows Rear Side

Second-row windows .... Power second-row windows

Miscellaneous

Trip computer ..... Trip computer
Upfitter switches ..... Upfitter switches
Over the air updates ..... Over the air updates
PRND in IP ..... PRND in IP
Accessory power ..... Retained accessory power

Comfort

Climate Control

Climate control ..... Manual climate control
Rear under seat ductsRear under seat climate control ducts
Cabin air filter ..... Cabin air filter

Headliner

Headliner material ..... Cloth headliner material
Headliner coverage ..... Full headliner coverage

Floor Trim

Floor covering ..... Full vinyl floor covering
Floor coverage ..... Full floor coverage

Second-Row Seat Trim

Rear seat upholstery ..... Vinyl rear seat upholstery
Rear seatback upholstery ..... Carpet rear seatback upholstery

Steering Wheel

Steering wheel material ..... Urethane steering wheel
Steering wheel tilt ..... Manual tilting steering wheel
Steering wheel telescopic . Manual telescopic steering wheel

Seats and Trim

Seat Capacity

Seating capacity 6

Front Seats

Front seat type ..... Split-bench front seat
Driver seat fore/aft control . Manual driver seat fore/aft control
Split front seats ..... 40-20-40 split-bench front seat
Driver seat direction Driver seat with 4-way directional controls
Passenger seat direction Front passenger seat with 4-way directional controls
Reclining passenger seat Manual reclining passenger seat

Prices and content availability as shown are subject to change and should be treated as estimates only. Actual base vehicle, package and option pricing may vary from this estimate because of special local pricing, availability or pricing adjustments not reflected in the dealer's computer system. See salesperson for the most current information.

2026 F-550 Chassis 4x4 SD Super Cab 168" WB DRW XL (X5H)

Price Level: 630 | Quote ID: 25VL025

Selected Equip & Specs (cont'd)

Passenger seat fore/aft control ..... Manual passenger seat fore/aft control
Front head restraints ..... Height adjustable front seat head restraints
Front head restraint control ..... Manual front seat head restraint control
Armrests front center ..... Front seat center armrest
Armrests front storage ..... Front seat armrest storage
Reclining driver seat ..... Manual reclining driver seat

Rear Seats

Bench seats ..... Split-bench rear seat
Rear seats fixed or removable ..... Fixed rear seats
Folding second-row seats ..... 60-40 folding rear seats
Rear seat direction ..... Front facing rear seat
Rear seat folding position ..... Fold-up rear seat cushion
Rear head restraints Height adjustable rear seat head restraints
Rear head restraint control ..... Manual rear seat head restraint control
Number of rear head restraints ..... 3 rear seat head restraints

Lumbar Seats

Driver lumbar ..... Manual driver seat lumbar

Front Seat Trim

Front seat upholstery ..... Vinyl front seat upholstery
Front seatback upholstery ..... Vinyl front seatback upholstery

Interior Accents

Interior accents ..... Chrome interior accents

Gearshifter Material

Gearshifter material ..... Urethane gear shifter material

Entertainment Features

Displays

Primary touchscreen display ..... Primary touchscreen display
Number of first-row displays 2 total number of 1st row displays
Primary display size ..... 8 inch primary display

Radio Features

External memory ..... SYNC 4 external memory control
Seek scan ..... Seek scan

Speakers

Speakers ..... Standard grade speakers
Speakers number 6

Audio Features

Steering mounted audio control ..... Steering wheel mounted audio controls
Speed sensitive volume ..... Speed sensitive volume
Voice activated audio ..... SYNC 4 voice activated audio controls
Wireless streaming ..... Wireless audio streaming

Lighting, Visibility and Instrumentation

Prices and content availability as shown are subject to change and should be treated as estimates only. Actual base vehicle, package and option pricing may vary from this estimate because of special local pricing, availability or pricing adjustments not reflected in the dealer's computer system. See salesperson for the most current information.

2026 F-550 Chassis 4x4 SD Super Cab 168" WB DRW XL (X5H)

Price Level: 630 | Quote ID: 25VL025

Selected Equip & Specs (cont'd)

Instrumentation

Trip odometer ..... Trip odometer
Configurable instrumentation gauges .... Configurable instrumentation gauges
Instrumentation display Digital/analog instrumentation display

Instrumentation Displays

Temperature display ..... Exterior temperature display
Clock ..... Digital clock
Driver information center .... Driver information center
Compass ..... Compass

Instrumentation Gauges

Tachometer ..... Tachometer
* **Turbo gauge .... Turbo/supercharger boost gauge**
Gauge cluster display size (inches) 4.20
* **DEF fluid gauge .. Diesel exhaust fluid (def) gauge**
Transmission temperature gauge .. Transmission fluid temperature gauge
Engine/electric motor temperature gauge ..... Engine/electric motor temperature gauge
Engine hour meter ..... Engine hour meter

Instrumentation Warnings

Engine temperature warning ..... Engine temperature warning
Low fuel warning ..... Low fuel warning
Battery charge warning ..... Battery charge warning
Key in vehicle warning ..... Key in vehicle warning
Service interval warning ..... Service interval indicator
* **Low diesel exhaust fluid (DEF) warningLow diesel exhaust fluid (DEF) warning**
Oil pressure warning ..... Oil pressure warning
Low brake fluid warning ..... Low brake fluid warning
Headlights on reminder ..... Headlights on reminder
Door ajar warning ..... Door ajar warning
Low tire pressure warning ..... Tire specific low air pressure warning

Glass

Tinted windows ..... Light tinted windows

Headlights

Headlights ..... Halogen headlights
Auto headlightsAutolamp auto on/off headlight control
Delay off headlights ..... Delay-off headlights
Headlight type ..... Reflector headlights
Multiple headlights ..... Multiple enclosed headlights
DRL preference setting ..... DRL preference setting

Front Windshield

Wipers ... Variable intermittent front windshield wipers

Interior Lighting

Illuminated entry ..... Illuminated entry
Front reading lights ..... Front reading lights
Variable panel light .... Variable instrument panel light

Lights

Running lights ..... Daytime running lights
Interior courtesy lights .... Fade interior courtesy lights

Prices and content availability as shown are subject to change and should be treated as estimates only. Actual base vehicle, package and option pricing may vary from this estimate because of special local pricing, availability or pricing adjustments not reflected in the dealer's computer system. See salesperson for the most current information.

2026 F-550 Chassis 4x4 SD Super Cab 168" WB DRW XL (X5H)

Price Level: 630 | Quote ID: 25VL025

Selected Equip & Specs (cont'd)

* **Fog lights** ..... **Front fog lights**
Perimeter approach lighting ..... Remote activated perimeter approach lighting
Clearance lights ..... Cab clearance lights

Technology and Telematics

Connectivity

Handsfree ..... SYNC 4 handsfree wireless device connectivity
Emergency SOS SYNC 4 911 Assist emergency SOS system via mobile device
Smart device integration ..... Smart device wireless mirroring

Internet Access

Internet access ..... 5G Modem - Ford Connectivity Package mobile hotspot internet access

USB Ports

USB ports ..... 2 USB ports

Safety and Security

Airbags

Front impact airbag driver ... Driver front impact airbag
Front impact airbag passenger ..... Cancellable front passenger air bag
Front side impact airbag passenger .... Seat mounted side impact front passenger airbag
Number of airbags ..... 6 airbags
Front side impact airbag driver .... Seat mounted side impact driver airbag
Overhead airbags . Safety Canopy System curtain first and second-row overhead airbags

Seatbelts

Height adjustable seatbelts .... Front height adjustable seatbelts

Security System

Immobilizer ..... SecuriLock immobilizer
Security system ..... Ford Security Package (1-year included with activation) security system
Remote panic alarm ..... Remote panic alarm

Prices and content availability as shown are subject to change and should be treated as estimates only. Actual base vehicle, package and option pricing may vary from this estimate because of special local pricing, availability or pricing adjustments not reflected in the dealer's computer system. See salesperson for the most current information.

2026 F-550 Chassis 4x4 SD Super Cab 168" WB DRW XL (X5H)

Price Level: 630 | Quote ID: 25VL025

Vehicle Dimension and Performance Summary

Performance predictions in this report represent an estimate of vehicle performance based on standard operating conditions. Variations in customer equipment, load configuration, ambient conditions, and/or operator driving techniques can cause significant variations in vehicle performance. These values are not representative of results that may be shown in actual dynamometer tests. This report should therefore be used as a guide for comparative vehicle performance.

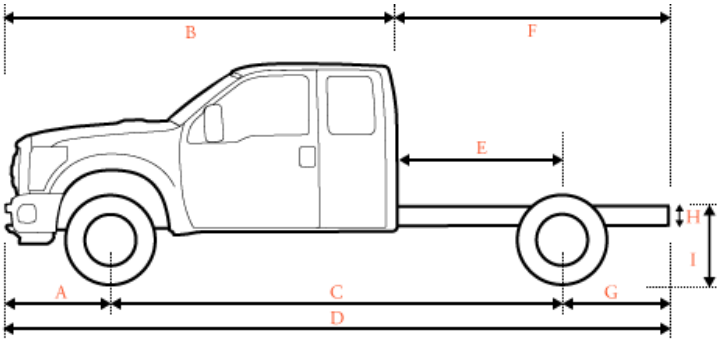

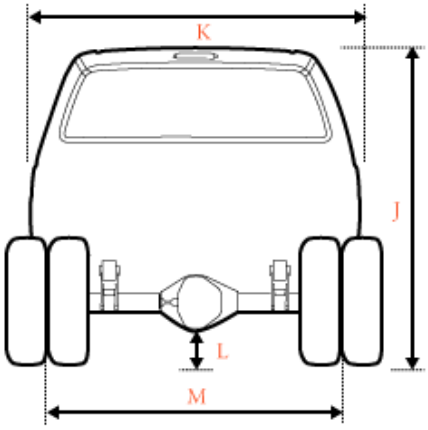

Dimensions

A	Front of Bumper to Front Axle	38.30 in.
B	Front Bumper to Back of Cab (BBC)	146.30 in.
C	Wheelbase (WB)	168.00 in.
D	Overall Length (OAL)	253.30 in.
E	Back of Cab to Rear Axle (CA)	60.00 in.
F	Back of Cab to End of Frame	107.20 in.
G	Rear Axle to End of Frame (AF)	47.20 in.
H	Frame Section Height	N/A
I	Rear Frame Height Unloaded	35.00 in.
I	Rear Frame Height Loaded	29.60 in.
J	Cab Height	82.50 in.
K	Body Width	80.00 in.
L	Maximum Ground Clearance	N/A
L	Minimum Ground Clearance	8.60 in.
M	Front Tread	74.80 in.
M	Rear Tread	74.00 in.

Prices and content availability as shown are subject to change and should be treated as estimates only. Actual base vehicle, package and option pricing may vary from this estimate because of special local pricing, availability or pricing adjustments not reflected in the dealer's computer system. See salesperson for the most current information.

2026 F-550 Chassis 4x4 SD Super Cab 168" WB DRW XL (X5H)

Price Level: 630 | Quote ID: 25VL025

Vehicle Dimension and Performance Summary (cont'd)

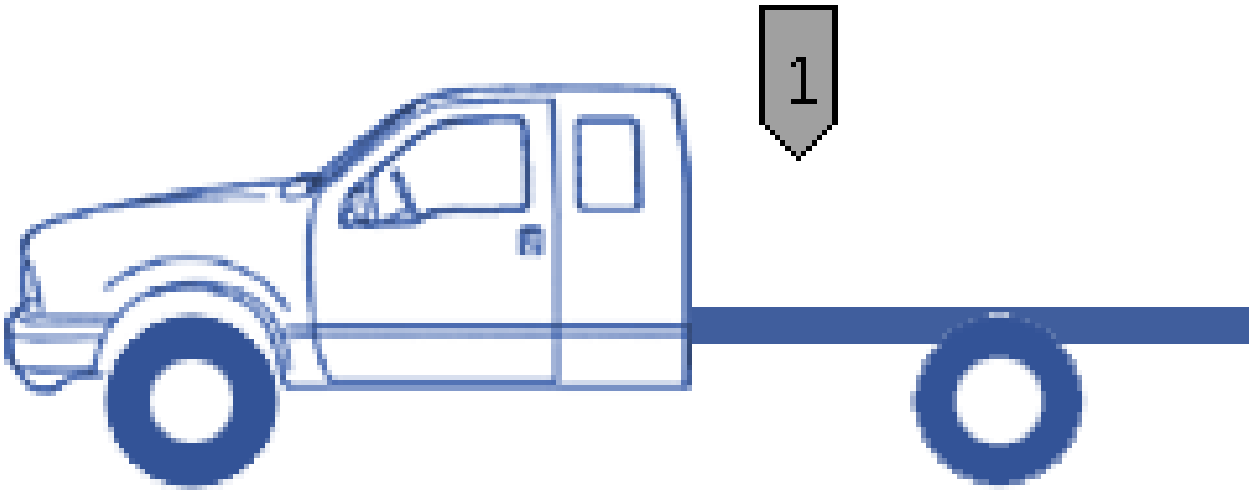

Weight

GVW	Front Axle	Rear Axle	Totals
Chassis	4,371 lbs	3,629 lbs	8,000 lbs
Body	0 lbs	0 lbs	0 lbs
Occupants Weight	600 lbs	300 lbs	900 lbs
1 Max Payload - (Max Payload)	2,529 lbs	10,777 lbs	13,306 lbs
TOTAL	**7,500 lbs**	**14,706 lbs**	**22,206 lbs**

Ratings	Front Axle	Rear Axle	GVWR
GAWR	**7,500 lbs**	**14,706 lbs**	**19,550 lbs**
Wheels/Tires	7,500 lbs	15,000 lbs	
Suspension	7,500 lbs	14,706 lbs	
Axle	7,500 lbs	14,706 lbs	
Legal Axle Limit	0 lbs	0 lbs	

Prices and content availability as shown are subject to change and should be treated as estimates only. Actual base vehicle, package and option pricing may vary from this estimate because of special local pricing, availability or pricing adjustments not reflected in the dealer's computer system. See salesperson for the most current information.

2026 F-550 Chassis 4x4 SD Super Cab 168" WB DRW XL (X5H)

Price Level: 630 | Quote ID: 25VL025

Vehicle Dimension and Performance Summary (cont'd)

Start, Grade and Speed

Start	Ratio	Desired	Calculated
Start grade capability in 1st gear	4.62	15.00 %	57.26 %
Start grade capability in reverse	4.70	15.00 %	58.25 %

Grade	Ratio	Desired	Calculated
Maximum grade in 8th gear	0.85	3.00 %	10.72 %
Maximum grade in 9th gear	0.69	3.00 %	8.65 %
Maximum grade in 10th gear	0.63	3.00 %	7.96 %

Speed	Desired	Calculated
Top Speed (level grade)	75 mph	90 mph
To meet your requirement you need a maximum axle ratio of 5.18		
Top Speed on 3% grade	55 mph	
To meet your requirement you need a maximum of 123 hp		
Cruise Speed	60 mph	79 mph
Engine RPM at desired cruise speed		1,753 rpm

Variables in Use

Start

Rear axle ratio:	4.30	Clutch engagement torque:	475 ft.lbs.
Tire size:	225/70R19.5 (645 rev/mile)	Torque conversion ratio:	1.97
Gross Vehicle Weight (GVW):	19,550 lbs		

Grade

Rear axle ratio:	4.30	Gross Vehicle Weight (GVW):	19,550 lbs
Tire size:	225/70R19.5 (645 rev/mile)	Peak engine torque:	950 ft.lbs.

Speed

Engine Power:	330 hp @ 2,200 rpm	Worst road surface	Typical Highway
Governed RPM:	2,640 rpm	Final Drive Ratio:	0.63
Frontal Area:	40.83 ft²	Drag Coefficient	0.80
Cruising RPM	2,300 rpm		

Prices and content availability as shown are subject to change and should be treated as estimates only. Actual base vehicle, package and option pricing may vary from this estimate because of special local pricing, availability or pricing adjustments not reflected in the dealer's computer system. See salesperson for the most current information.

2026 F-550 Chassis 4x4 SD Super Cab 168" WB DRW XL (X5H)

Price Level: 630 | Quote ID: 25VL025

Vehicle Dimension and Performance Summary (cont'd)

Turning Radius

Turning Radius ..... 24.05 ft

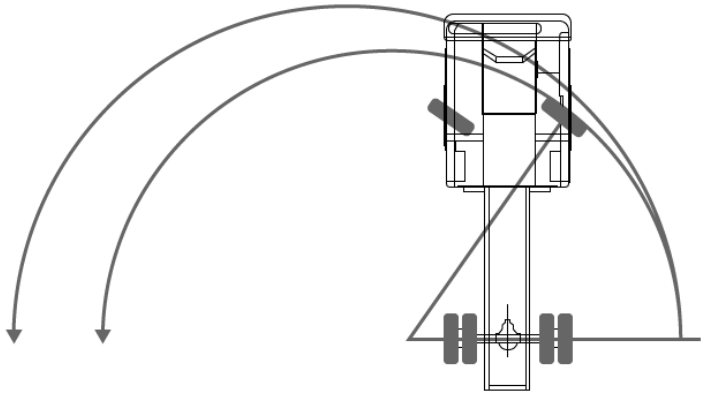

Prices and content availability as shown are subject to change and should be treated as estimates only. Actual base vehicle, package and option pricing may vary from this estimate because of special local pricing, availability or pricing adjustments not reflected in the dealer's computer system. See salesperson for the most current information.

2026 F-550 Chassis 4x4 SD Super Cab 168" WB DRW XL (X5H)

Price Level: 630 | Quote ID: 25VL025

Warranty

Standard Warranty

Basic Warranty

Basic warranty	36 months/36,000 miles

Powertrain Warranty

Powertrain warranty	60 months/60,000 miles

Corrosion Perforation

Corrosion perforation warranty	60 months/unlimited

Roadside Assistance Warranty

Roadside warranty	60 months/60,000 miles

Additional Warranty

Diesel Engine Warranty

Diesel engine warranty	60 months/100,000 miles

Prices and content availability as shown are subject to change and should be treated as estimates only. Actual base vehicle, package and option pricing may vary from this estimate because of special local pricing, availability or pricing adjustments not reflected in the dealer's computer system. See salesperson for the most current information.